Pendulous Feeder

Principle

This equipment is generally installed blow the outlet of feed bin, from which the ores fall into the feeding tank. In the operation, the motor through coupling drive the rotation of worm reducer and the reciprocating motion of the swing base of feeding tank through the eccentric wheel installed on the output shaft of the reducer, by which the even feeding is completed. The regulation of eccentric distance by adjusting the scale of eccentric disc on the eccentric wheel can realize the adjustment of feeding capacity, which is also by adjusting the revolving speed of adjustable-speed motor to change the swing times.

Features

This feeder is sturdy and durable with simple structure and convenient operation, and is the best choice for the uniform feeding of all kinds of particle materials.

Application

As a kind of accessory equipment of transport machinery suspended on the steel structure and installed below the hopper, it is used for the continuous feeding in the plants of mineral processing, smelting, cement, and placer, or in the mechanized foundry.

Technical Parameters

Model	Inlet (L×W) (mm)	Outlet (L×W) (mm)	Stroke of Eccentric Wheel (mm)	Frequency (n/min)	Max. Feed Size (mm)	Feed Capacity (t/h)	Motor Model	Motor Power (kW)	Rotating Speed of Motor (r/min)	Weight (kg)
BG250×250	250×250	250×(30~125)	0~90	46	25	4.5	Y80L-4	0.55	1390	130
BG300×300	300×300	300×(30~125)		46	30	6.5	Y802-4	0.75	1390	150
BG400×400	400×400	400×(50~130)	0~170	45.5	35	12	Y90S-4	1.1	1410	300
BG600×600	600×600	600×(50~150)	0~157	48	50	40~80	Y100L-4	1.5	940	450

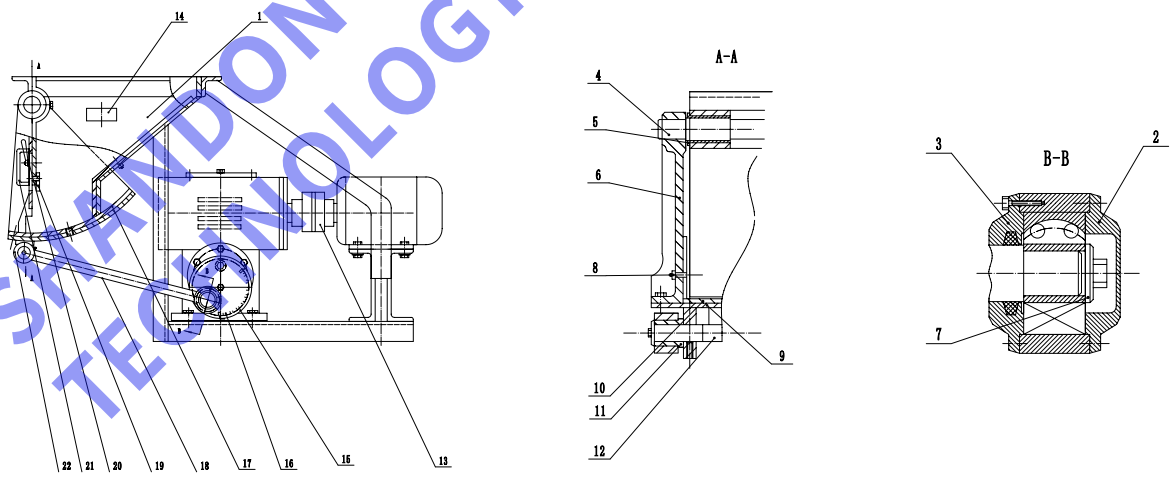

■ Structure Drawing of Pendulous Feeder

◎ Notes: 1. Frame 2. Bearing cover 3. Cover 4. Armshaft 5. Sheath 6. Pendulum
7. Retaining ring 8. Side plate 9. Pendulum bottom 10. Lining plate 11. Sheath 12. Lower shaft
13. Coupling 14. Label 15. Eccentric wheel body 16. Eccentric wheel 17. Frame lining plate 18. Connecting rod
19. Plate 20. Hand shank 21. Gate 22. Support

SHANDONG XINHAI MINING TECHNOLOGY & EQUIPMENT INC.