Disk Feeder

Principle

Bulk materials are put into the cylinder from the hopper, and stacked on the disk by gravity along the cylinder wall. The clearance between sleeve and disk can be adjusted by adjusting bolt so as to control the angle of repose on the disk. When the disk rotates, materials are evenly scraped to the outside of disk by the unloading knife and fall into the hopper. The uniform feeding operation completes with the disk continuous operation. Adjusting the clearance between the unloading knife and disk can also control the feeding amount. In the operation, the motor through the belt pulley drives the rotation of the disk installed on the worm reducer.

Features

This feeder is sturdy and durable with simple structure and convenient operation, and is the best choice for the uniform feeding of all kinds of particle materials.

Application

As a kind of accessory equipment of transport machinery suspended on the steel structure and installed below the hopper, it is used for the continuous feeding in the plants of mineral processing, smelting, cement, and placer, or in the mechanized foundry.

Technical Parameters

Type	Model	Disk Diameter (mm)	Rotating Speed of Disk (r/min)	Max. Feed Size (mm)	Feed Capacity (t/h)	Motor Model	Motor Power (kW)	Weight (kg)
Close Hanged	YG300	300	10. 0	20	0~ 1. 8	Y80L- 4	0. 55	115
	YG400	400	10. 7		0~ 2. 6	Y90L- 6	1. 1	120
	YG500	500			0~ 3. 3			124
	YG600	600	10. 0		0~ 5. 0			130
	YG800	800	9	30	0~ 8. 0	Y80L- 4	0.55	195
	YG1000	1000	9	30	0~ 12	Y90L- 4	1. 5	263
	YG1500	1500	7	40	0~ 22	Y132M2-6	5. 5	755
	YG2000	2000	5	50	0~80	Y160L-6	11	2517
Open Hanged	DK600	600	7. 53	25	1. 8~ 3. 9	Y90L- 6	1. 1	410
	DK800	800	7. 53	30	3. 5~ 7. 6			600
	DK1000	1000	7. 50	40	1.8~ 16.7	Y100L- 6	1. 5	725
	DK1300	1300	6. 5	50	4. 3~27. 9	Y132S- 6	3	846
	DK1600	1600	6	60	7.03~48.6	Y132M1- 6	4	1980
	DK1800	1800	5	70	9.26~60	Y132M2- 6	5.5	3070
	DK2000	2000		80	13.6~88.4	Y132M2- 6		3260

SHANDONG XINHAI MINING TECHNOLOGY & EQUIPMENT INC.

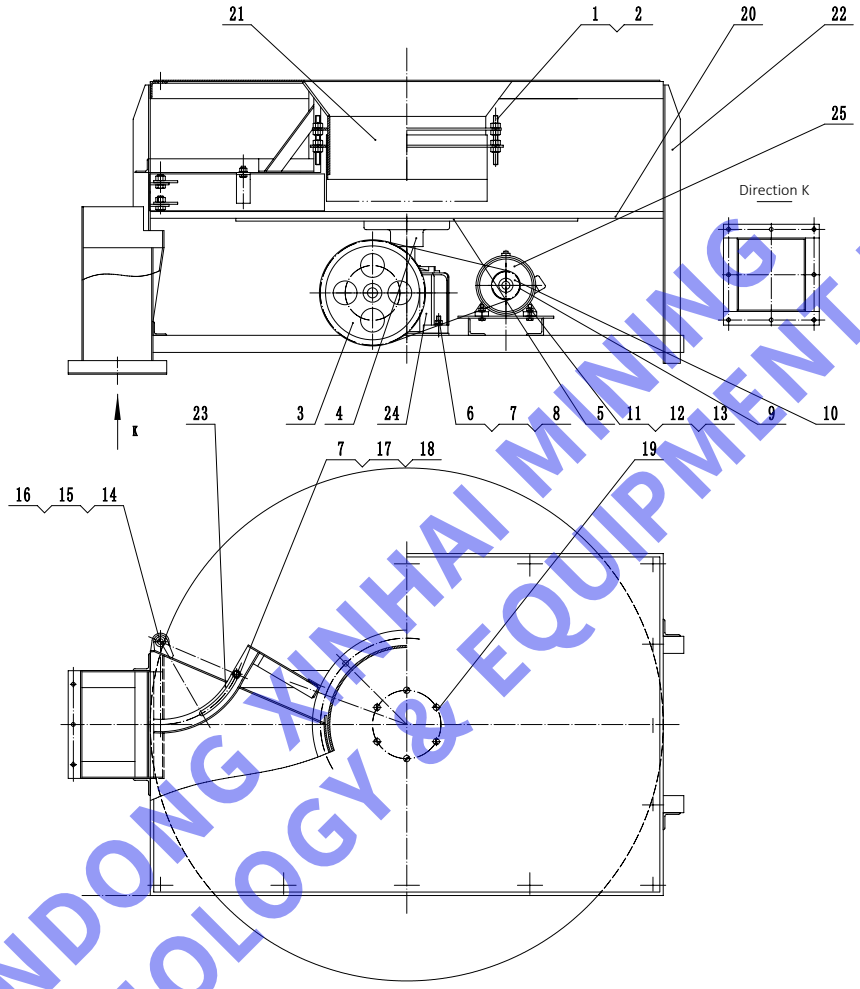

Structure Drawing of Disk Feeder

◎ Notes:

1. Adjusting bolt	2. Nut	3. Big V belt wheel	4. Pallet	5. Round disc
6. Bolt	7. Nut	8. Spring washer	9. V belt	10. Small V belt wheel
11. Bolt	12. Nut	13. Spring washer	14. Pin roll	15. Washer
16. Cotter pin	17. Bolt	18. Washer	19. Sunk screw	20. Disc
21. Adjusting sleeve	22. Rack	23. Unload knife	24. Worm reducer	25. Motor

SHANDONG XINHAI MINING TECHNOLOGY & EQUIPMENT INC.